PREPARING FREIGHT FOR SHIPMENT

Packaging

When shipping your goods, be sure to use proper packaging techniques to avoid damages and claims:

- Stack the pallet vertically to maximize carton strength.
- Stack cartons squarely on the skid with minimum overhang.
- Add sheets of cardboard between each layer for additional strength.
- Make sure the top surface is flat.
- Secure cartons to the pallet with banding, stretch-wrap or breakaway adhesive.

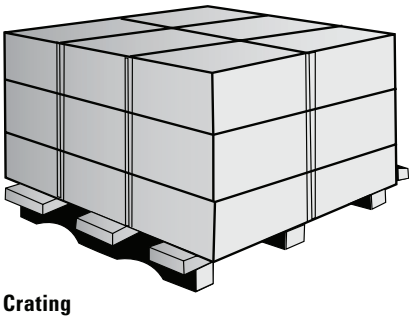

Crating

To ensure safe and damage-free transit, crate your shipments. A crate's strength should be matched to the weight and density of the product to be shipped.

- Fasten crated contents to the base.
- Fully enclose the product, and show how the product should be loaded with arrows or other directional indications.
- Nail or staple into the side grain of the crate.
- Staple labels to crates instead of using gummed labels, as these do not adhere to wood.

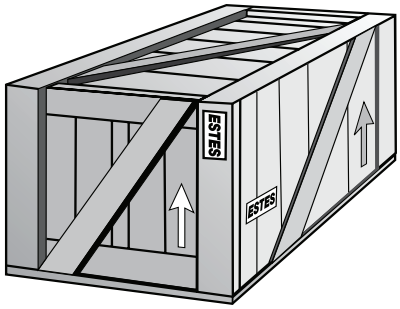

Leveling Uneven Surfaces

To prevent freight from shifting, uneven surfaces should always be leveled before more freight is stacked. Freight can be leveled by using:

- Flattened cardboard
- Other freight
- Two-by-fours

Bracing Freight

Logistic bars are used to brace freight from damaging itself, other freight or the trailer. Please see the next page for precautions when shipping freight that rolls, shifts or slides easily during transit.

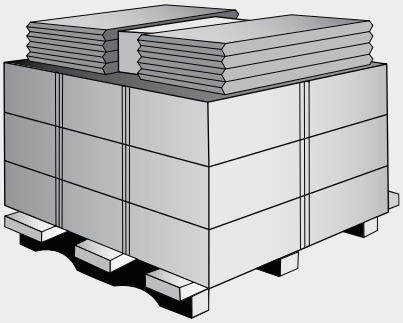

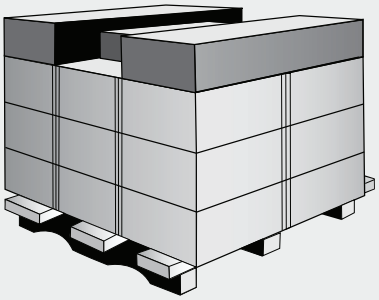

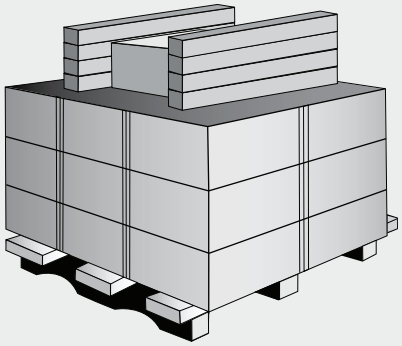

Shipping Drums, Pails and Bags

Estes will accept drums from a shipper if there are three or four drums on a pallet and the drums are secured on the pallet by banding and/or stretch-wrap. Banding ONLY is not acceptable. Here are some rules to follow when shipping drums, pails and bags:

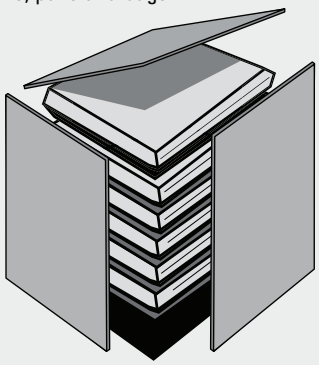



Do:

- Cover the trailer floor with a layer of cardboard for protection.
- Cover all sides of the freight with cardboard for protection after loading.
- Label the containers as well as the stretch-wrap or banding, if the drums, pails or bags contain DOT hazardous materials.

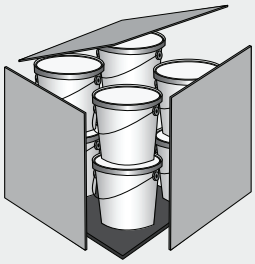

Don't:

- Stack pails more than two high.
- Place pails between two skids.
- Load stacked pails in the rear 7 to 10 feet of the trailer.

